QUOIZEL
6 CORPORATE PARKWAY
GOOSE CREEK, SC. 29445
www. quoizel. com

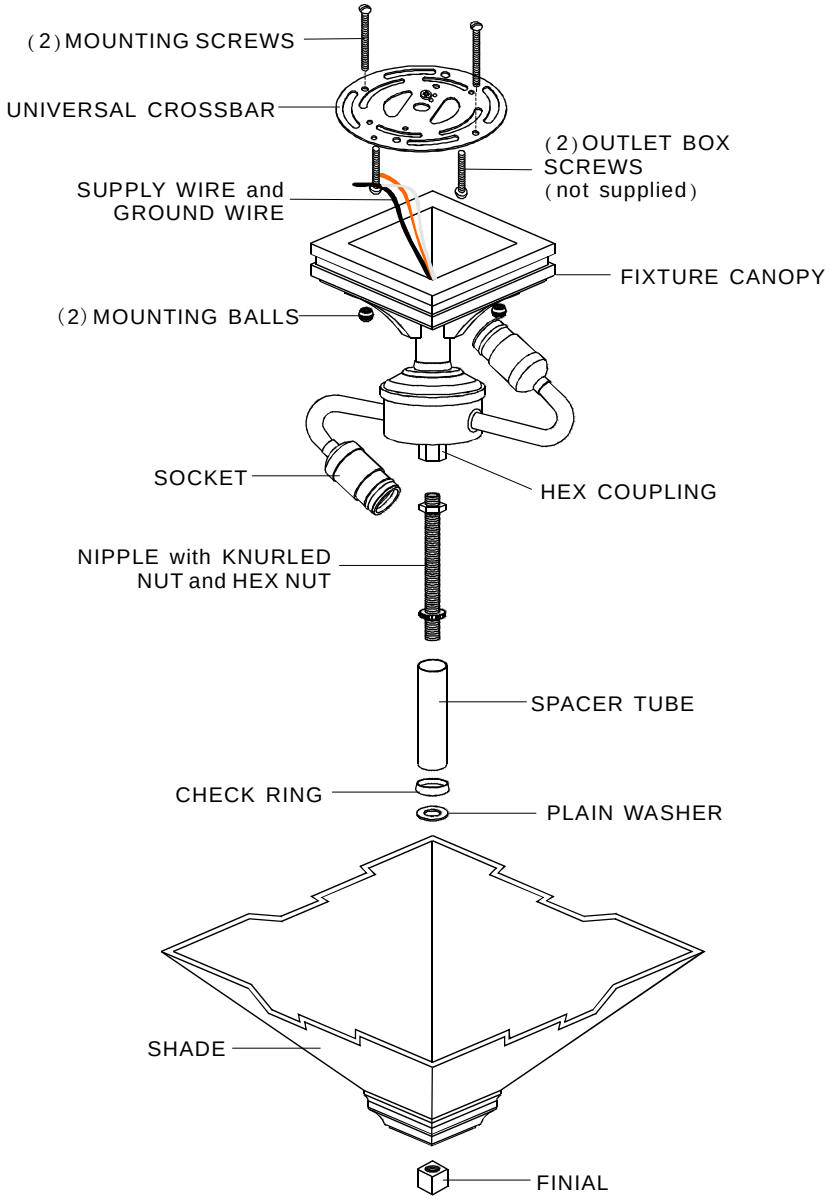

IF IN DOUBT ABOUT ELECTRICAL INSTALLATION, CONSULT A LICENSED ELECTRICIAN!

ASSEMBLY / INSTALLATION INSTRUCTIONS

1. Before beginning the installation, carefully unpack and identify all parts, referring to the illustration.

2. Turn the electrical power to installation point OFF at circuit breaker.

3. Remove KNURLED NUT from the NIPPLE and thread the HEX NUT end of the NIPPLE into the HEX COUPLING underside of the JUNCTION BOX. Using plier, thread HEX NUT against the HEX COUPLING and hand tighten until snug. Proceed to pass the SPACER TUBE and the CHECK RING over the end of the NIPPLE. Secure with the KNURLED NUT and hand tighten until snug.

4. Locate the PLAIN WASHER and SHADE over the end of the NIPPLE and secure with the FINIAL. Hand tighten until snug.

5. Locate the (2) MOUNTING SCREWS and thread them into the back of the UNIVERSAL CROSSBAR, making sure that they match the holes in the FIXTURE CANOPY. Using (2) OUTLET BOX SCREWS (not supplied), fasten the UNIVERSAL CROSSBAR to the OUTLET BOX.

6. **MAKING THE CONNECTIONS:** Using wire connectors (not supplied) connect the HOUSE GROUND WIRE to the FIXTURE GROUND WIRE; connect the HOUSE WHITE WIRE to the FIXTURE SUPPLY WIRE (WHITE or RIBBED SIDE); connect the HOUSE BLACK (or RED) WIRE to the FIXTURE SUPPLY WIRE (BLACK or SMOOTH SIDE). Wrap each connection with approved electrical tape.

7. Carefully tuck all of the wiring up into the outlet box, and fit the FIXTURE CANOPY over the MOUNTING SCREWS. Secure the FIXTURE CANOPY to the ceiling with the (2) MOUNTING BALLS, making sure that the balls are fully threaded onto the MOUNTING SCREWS before tightening.

8. Install bulbs referring to fixture markings and/or labels for maximum wattage.

9. Restore power to installation point ON. Retain this sheet for future reference.

IS-TFIK1714
Revised 2009-03-06